Instructions for Use and Technical Description

Praktika 2

Positionable hospital bed

CE

D9U001F20-0101

Version: 07

Publication Date: 2020-02

Manufacturer:

LINET spol. s r.o.
Želevčice 5
274 01 Slaný
Czech Republic

Tel.: +420 312 576 111
Fax: +420 312 522 668

E-mail: info@linet.cz
http://www.LINET.com

Praktika 2
Positionable hospital bed

Author: LINET, s.r.o.
Related links: www.linet.cz

D9U001F20-0101
Version: 07
Publication Date: 2020-02

Copyright © LINET, s.r.o., 2020
Translation © LINET, 2020

All rights reserved. All trademarks and brands are the property of the appropriate owners. The manufacturer reserves the right to changes in the contents of the instructions for use that relate to the product´s technical regulations. It is for this reason that the contents of the instructions for use may indicate differences from the current manufacture of the product.

Table of Contents

1 Symbols and Definitions 4
1.1 Warning Notices 4
1.1.1 Types of Warning Notices 4
1.1.2 Structure of Warning Notices 4
1.2 Instructions 4
1.3 Lists 4
1.4 Symbols on the Package 5
1.5 Symbols and Labels on the Bed 6
1.6 Serial Label with UDI 9
1.7 Definitions 10
1.8 Abbreviations 10
2 Safety Instructions 11
3 Intended use 14
3.1 User population 14
3.2 Contraindications 14
3.3 Operator 14
4 Incorrect Use 14
5 Product Description 15
5.1 Praktika 2 with Split Plastic Siderails 15
6 Technical Specification 16
6.1 Applied Parts Type B 16
6.2 Mechanical Specification 16
7 Use Conditions 17
8 Scope of Delivery and Bed Variants 17
8.1 Scope of Delivery 17
8.2 Bed Variants 17
9 Putting into Service 18
9.1 Head Board and Foot Board 19
9.2 Mattress support platform 20
9.3 Initial Operation 20
9.4 Transport 20
10 Manipulation – Bed Positioning 21
10.1 Positions of Levers 21
10.2 Manipulation with Levers 21
10.3 Bed Positioning 22
10.3.1 Backrest Positioning 22
10.3.2 Thighrest Positiong 23
10.3.3 Bed Height Positiong 24
10.3.4 Mechanical positioning of calfrest 25
10.3.5 Trendelenburg / Antitrendelenburg position 26
10.4 Quick Backrest Lowering for the Crisis Situations 27
11 Siderails 28
11.1 Single Collapsible Siderails – Controlled From Bottom 28
11.2 Split Plastic Siderails 29
12 Castor Control and Bed Transport 29
12.1 Castors with Individual Brake 30
12.2 Castors with Single Axe Brake 30
13 Equipment 30
13.1 Accessory Rail 30
14 Mattress 31
15 Accessories 31
15.1 Bushings for Accessories 31
15.2 Lifting Pole 32
15.3 Infusion Stand 33
15.4 Protector® 34
15.5 Extender – for Single Collapsible Siderails 35
16 Cleaning/Disinfection 36
16.1 Safety Instructions for Cleaning and Disinfection of the Bed 37
16.2 General Instructions for Cleaning and Disinfection 37
16.2.1 Daily Cleaning 37
16.2.2 Cleaning before Changing Patients 37
16.2.3 Complete Cleaning / Cleaning before First Use 37
16.2.4 Cleaning of Spilled Fluids 37
16.2.5 Damaged Foam Mattress 37
16.3 Choosing of Detergents or Disinfections 38
17 Troubleshooting 39
18 Maintenance 40
18.1 Regular maintenance 40
18.2 Spare Parts 40
18.3 Safety Technical Checks 40
19 Disposal 41
19.1 Environment Protection 41
19.2 Disposal 41
19.2.1 Within Europe 41
19.2.2 Outside Europe 41
20 Warranty 42
21 Standards and Regulations 42

1 Symbols and Definitions

1.1 Warning Notices

1.1.1 Types of Warning Notices

Warning notices are differentiated by the type of danger using the following key words:

► **CAUTION** warns about the risk of material damage.
► **WARNING** warns about the risk of physical injury.
► **DANGER** warns about the risk of fatal injury.

1.1.2 Structure of Warning Notices

SIGNAL WORDS!
Type and source of danger!
► Measures to avoid the danger.

1.2 Instructions

Structure of instructions:

► Perform this step.
Results, if necessary.

1.3 Lists

Structure of bulleted lists:

- List level 1
  - List level 2
    - List level 3

1.4 Symbols on the Package

	FRAGILE, HANDLE WITH CARE
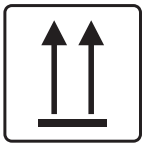	THIS WAY UP
	KEEP DRY (PROTECT FROM HUMIDITY)
	PAPER RECYCLING SYMBOL
	DO NOT USE HAND TRUCK HERE
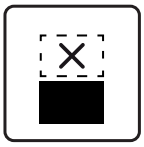	DO NOT STACK DURING STORAGE

1.5 Symbols and Labels on the Bed

	READ INSTRUCTIONS FOR USE
	WARNING
	WARNING AGAINST CRUSHING OR TRAPPING!
	CAUTION. REFER TO INSTRUCTIONS FOR USE TO INFORM YOURSELF ABOUT RISKS WHEN REMOVING HEAD BOARD OR FOOT BOARD
	DESCRIPTION „HOW TO CONTROL LEVER MECHANISMS“
	TRENDELENBURG / Antitrendelenburg POSITION
	DO NOT PLACE ANY OBJECTS UNDER MATTRESS PLATFORM
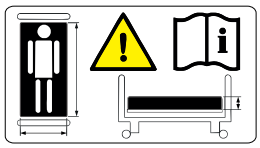	USE MATTRESS RECOMMENDED BY MANUFACTURER
	DO NOT PLACE LIFTING POLE IN THIS PLACE
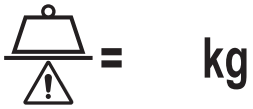	SAFE WORKING LOAD (SWL)
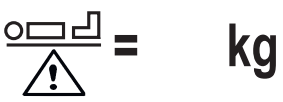	MAXIMUM WEIGHT OF PATIENT
	WEIGHT OF BED

	ONLY SUITABLE FOR INDOOR USE
	PROTECTION AGAINST ACCIDENTS DUE TO ELECTRICAL CURRENT – TYPE B APPLIED PARTS
	CE MARK OF CONFORMITY WITH EU REGULATION
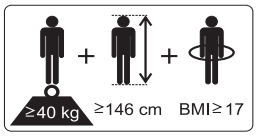	DESIGNATION OF HOSPITAL BED FOR ADULTS
	MEDICAL DEVICE (COMPATIBLE WITH MEDICAL DEVICE REGULATION)
	WEEE SYMBOL (RECYCLE AS ELECTRONIC WASTE, DO NOT PUT INTO THE HOUSEHOLD WASTE)
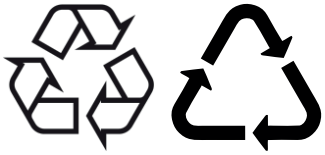	RECYCLING SYMBOL
	DO NOT POLLUTE THE ENVIRONMENT
	MANUFACTURER
	MANUFACTURING DATE
	REFERENCE NUMBER (PRODUCT TYPE DEPENDING ON CONFIGURATION)

SN	SERIAL NUMBER

1.6 Serial Label with UDI

Picture of serial label below serves just for explanation of the signs and fields on the serial labels.

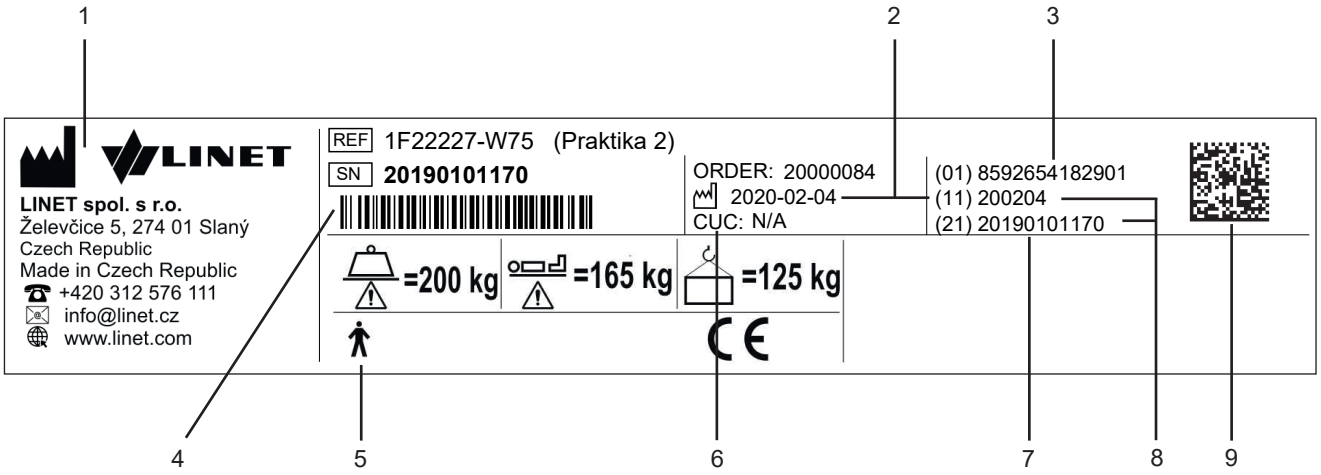

Fig. Serial Label with UDI (Praktika 2)

1	Address of Manufacturer
2	Manufacturing Date (Year-Month-Day)
3	DI (Device Identifier) / GTIN (Global Trade Item Number)
4	1D Bar code GS1-128 (Serial Number)
5	Symbols
6	Configuration number
7	Electrical Specification
8	Serial Number
9	PI (Product Identifier)
10	2D Bar Code (GS1 DataMatrix) **DI+PI=UDI**

1.7 Definitions

Basic Bed Configuration	the pricelist model configuration, not including a mattress
Bed Weight	The value depends on the product configuration, accessories or customer adjustments.
Clearance of Undercarriage	the height from the floor to the lowest point of the undercarriage between the castors, for the manipulation of accessories under a braked bed in the standard position
Duty Cycle	cycle of operation of the motor: time of activity/time of rest
Ergoframe	Ergoframe is the kinematic system of Mattress support platform Adjustment whose effect is the elimination of pressure on the patient´s abdomen and pelvic area and frictional forces on the patient‘s back and legs.
Maximum Patient Weight	Maximum Patient Weight depends on the application environment according to IEC 60601-2-52. For application environment 1 (intensive/critical care) and 2 (acute care) reduce Safe working Load by 65 kg. For application environment 3 (long-term care) and 5 (ambulatory care) reduce Safe working Load by 35 kg.
Safe Working Load	the highest allowable load on the bed (patient, mattress, accessories and the load supported by those accessories)
Siderail Height	the height of the upper crossbar or the edges of the siderails (not the highest point of the siderail controls) from the patient surface
Standard Bed Position	■ The lowest height of the mattress support platform with regard to the floor ■ The mattress support platform, including the individual parts, has to be in a horizontal (level - 0°) position. ■ The siderails are always locked in the upper position. ■ The basic position of the integrated extension.
Adult	Patient having a physical size equal to or more than 146 cm, a mass equal to or more than 40 kg and a body mass index (BMI) equal to or more than 17 (according to IEC 60601-2-52).

1.8 Abbreviations

CE	European Conformity
CPR	Cardiopulmonary Resuscitation
EAC	Eurasian Conformity
dB	Sound Intensity Unit
EMC	Electromagnetic Compatibility
FET	Field-effect transistor
HF	High Frequency
ICU	Intensive Care Unit
INT.	Duty Cycle
IV	Intravenous
LED	Light Emitting Diodes
ME	Medical Electrical (Equipment)
OFF	Deactivated
ON	Activated
REF	Reference number (product type depending on configuration)
SCU	System Control Unit
SN	Serial number
SWL	Safe Working Load
UDI	Unique Device Identification (for medical devices)
WEEE	Waste Electrical and Electronic Equipment
TR	Trendelenburg
ATR	Antitrendelenburg

2 Safety Instructions

WARNING!
Praktika 2 bed should be left in its lowest position when the patient is unattended in order to reduce risk of injury due to falls!

WARNING!
Siderails of Praktika 2 should be located in the „up“ position to reduce the risk of the patient accidentally slipping or rolling off the mattress!

WARNING!
Incompatible siderails and mattresses can cause an entrapment hazard!

WARNING!
When routing cables from other equipment in the Praktika 2 bed avoid squeezing those between parts of the Praktika 2 bed!

WARNING!
Praktika 2 bed should not be used with bed hoists and bed lifts!

WARNING!
To avoid risk of electric shock, this equipment must only be connected to a supply mains with protective earth.

WARNING!
During specific investigations or treatments the significant risks of reciprocal interference posed by medical electrical equipment may occur.

WARNING!
No modification of this equipment is allowed.

WARNING!
Do not modify this equipment without authorization of the manufacturer.

WARNING!
If this equipment is modified, appropriate inspection and testing must be conducted to ensure continued safe use of the equipment.

WARNING!
An additional multiple socket-outlet or extension cord shall not be connected to the medical electrical system.

WARNING!
Incompatible mattresses can create hazards.

WARNING!
The bed is intended for adults.
►Follow the chapter Intended use.

WARNING!
Only use accessories approved by manufacturer!
Injuries may occur in case of usage of other than approved accessories!

WARNING!
Any serious incident that has occurred in relation to the device should be reported to the manufacturer and the competent authority of the Member State in which the user and/or patient is established!

WARNING!
This medical device is not intended for oxygen enriched environment!

WARNING!
This medical device is not intended for use with flammable substances!

WARNING!
This medical device is not portable medical electrical equipment!

WARNING!
Make sure the duty cycle (2 min ON/18 min OFF) is not exceeded during bed positioning!

WARNING!
Patient is allowed to use selected control elements only if hospital personnel had assessed that the patient´s physical and psychological state is in accordance with use of them and only if the hospital personnel had trained the patient in accordance with the instructions for use!

- ► It is necessary to read the instructions for use before operating the bed.
- ► Follow the instructions carefully.
- ► Use the bed exclusively in its original condition.
- ► If necessary, check the bed functions daily or at each staff rotation.
- ► Ensure that the bed is operated exclusively by qualified personnel who have been trained according to the instructions for use.
- ► Ensure that the patient (health permitting) has been informed about the operation of the bed and all applicable safety instructions.
- ► Ensure the bed is only moved or positioned upon even, hard floor surfaces stated in chapter “Transport” and that environmental conditions meets conditions stated in chapter “Use Conditions”.
- ► Replace any damaged parts immediately with original spare parts.
- ► Ensure maintenance and installations are performed only by qualified personnel who have been trained by the manufacturer.
- ► Do not apply excess weight or load to the bed according to SWL (safe working load).
- ► Only one adult patient can use the bed at any time.
- ► Take care to avoid injuries or squeezing when operating moving parts.
- ► When using lifting poles or infusion stands, ensure nothing will be damaged when you move or adjust the bed.
- ► Ensure castors are braked when the bed is not being moved, regardless of whether the bed is occupied or empty.
- ► Ensure that siderails are operated by healthcare personnel only.
- ► Never use the bed in areas where there is a hazard or risk of explosion.
- ► Ensure moving parts of the bed are not blocked.
- ► To prevent failures, use exclusively the manufacturer’s original accessories and mattresses.
- ► Ensure the safe working load is not exceeded.
- ► Ensure the bed and its components are exclusively modified with the manufacturer´s approval.
- ► Any non-observance of the instructions for use may lead to injuries or material damage.
- ► Ensure there is no risk of crushing or otherwise injuring the patient’s limbs (e.g. between siderails and mattress platform, between movable parts etc.) before positioning the bed or folding down the siderails.
- ► Ensure that nobody can get injured while folding the siderails.
- ► Ensure no injuries will occur when folding the siderails.
- ► Use exclusively split plastic or split telescopic siderails for confused or disoriented patients or add Protector to the single collapsible siderails.
- ► If the patient is left without supervision of hospital personnel during day, adjust the mattress platform to recommended daily position (Fowler’s position) with mattress platform in lowest position and backrest adjusted to the angle of 30° in order to prevent the patient from falling or sustaining injuries.
- ► Adjust bed height to approx. 20 cm below maximum height when transporting the bed in order to facilitate overcoming possible obstacles.

3 Intended use

The intended use is the hospitalization of the patient in the acute and long-term care units, which includes above all the following aspects:

► Adjustment of the specific positions needed for the preventive reasons, routine nursing, treatments, mobilization, physiotherapy, examinations, sleeping, and relaxation. These positions are further specified and described in the clinical evaluation of this device, together with their potential clinical outcomes and benefits.

► Providing the safe environment for the patient during all relevant procedures. The particular requirements on patient safety are the subject of the clinical evaluation, including evaluation of the risk/benefit ratio. The relevant safety issues are the part of the risk management file.

► Patient in-bed indoor transport out of the patient room.

► Providing the suitable working conditions for the caregivers to perform the routine and specific tasks during the patient hospitalization.

3.1 User population

► Adult patients (weight >= 40 kg, height >= 146 cm, BMI >= 17) in the acute and long-term care units (Application Environment 2 and 3, as in IEC 60601-2-52)

► Caregivers (nurses, doctors, technical personnel, transport personnel, cleaning personnel)

3.2 Contraindications

► The medical device is not intended for the pediatric patients use.

► Certain positions are not suitable for specific diagnoses/medical conditions (e.g. spinal cord injuries vs. Fowler position, higher ICP patients vs. Trendelenburg). Staff expert assessment / nursing consideration is needed in all individual case of contraindication.

3.3 Operator

► Caregiver

► Patient (based on individual patient status assessment by caregiver the patient can utilize dedicated device functions)

4 Incorrect Use

Praktika 2 is not suitable for:

- Patients
  - Not fulfilling conditions stated in chapter “Intended Use”
- Use
  - Home care
  - Other than described in the instructions for use

NOTE For information concerning uses other than those outlined in the “Intended Use” section above, please contact LINET®.

LINET®’s efforts in research, design and manufacture ensure LINET® products are of the highest quality and fit for their intended purpose. However, LINET® can take no responsibility for any damage to the products or any harm to patients, staff or other individuals resulting from:

► Not following the instructions in the instructions for use, including warning notices.

► Using the product for a purpose other than the intended purpose stated in the relevant documentation provided by LINET® (see Intended Use).

5 Product Description

5.1 Praktika 2 with Split Plastic Siderails

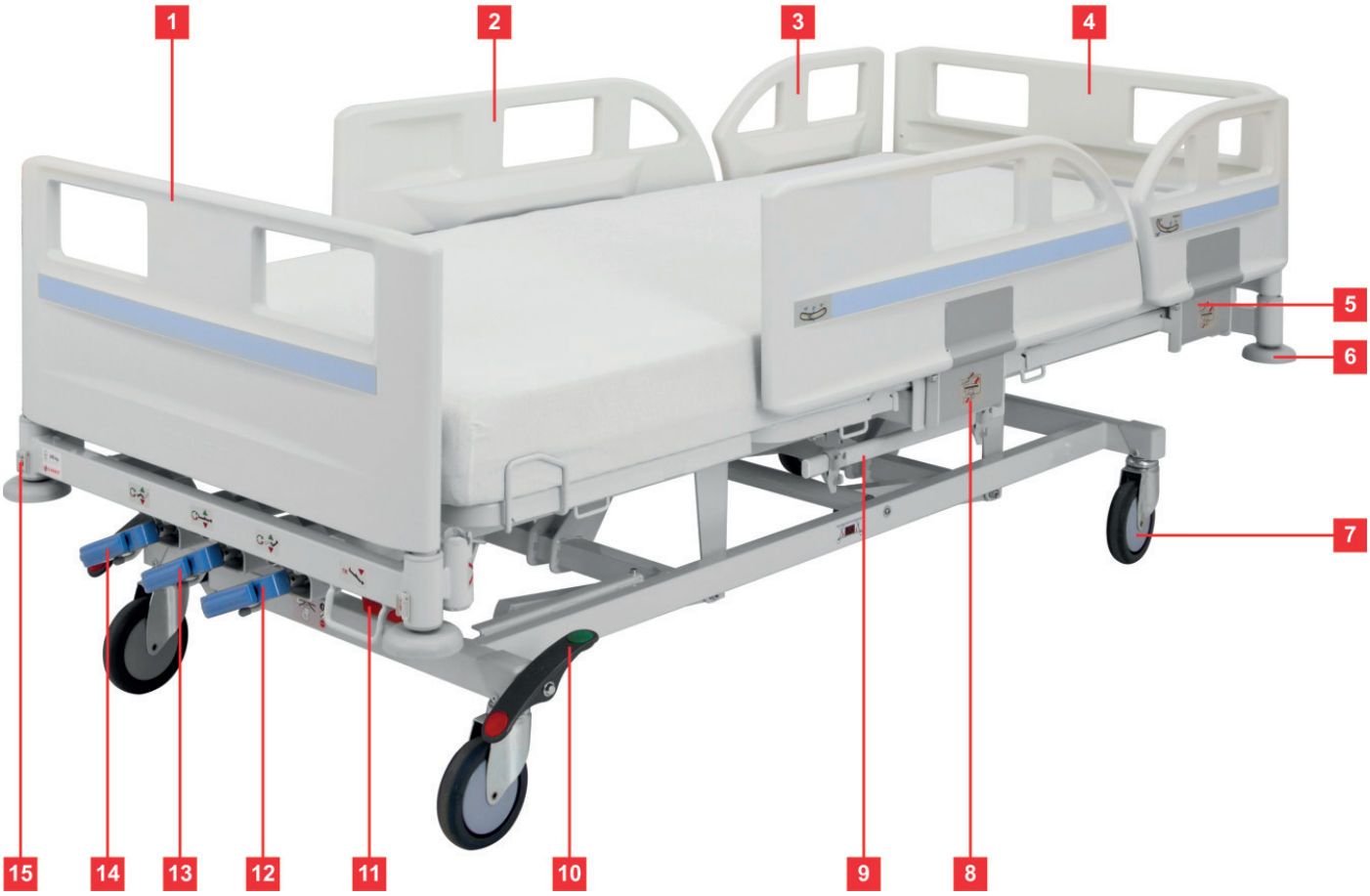

Fig. Praktika 2 with split plastic siderails

1. Foot board
2. Center split plastic siderail in highest positions
3. Head split plastic siderail in highest positions
4. Head board
5. Head siderail release mechanism
6. Protective bumper
7. Castor 150mm
8. Center siderail release mechanism
9. Accessory rail
10. Cental brake system lever
11. Lever for Trendelenburg / Antitrendelenburg positioning
12. Controlling lever for backrest positioning
13. Controlling lever for bed height positioning
14. Controlling lever for thighrest positioning
15. Foot board lock

6 Technical Specification

6.1 Applied Parts Type B

All the parts of the bed which patient can reach are type B applied parts.

List of type B applied parts:

- ► Siderails
- ► Head Board and Foot Board
- ► Mattress platform

6.2 Mechanical Specification

Parameter	Value
External dimension with split plastic siderails with single collapsible siderails	 218 x 99,5 cm 218 x 99,5 cm
Siderails height split plastic siderails single collapsible siderails (with Extender)	 37,9 cm 38,7 (+10 cm)
Siderails height split plastic siderails single collapsible siderails (with Extender)	 146,5 cm 146,3 cm
Mattress platform dimension (mattress) Standard	 200 cm x 90 cm
Maximum height of mattress with split plastic siderails with single collapsible siderails (with Extender)	 15 cm 16 cm (26 cm)
Space underneath the bed Mattress platform down	 8,5 cm 15 cm (since mattress platform height 49,5 cm)
Mattress platform height 125 mm castors 150 mm castors	 42 –76 cm 44,5 – 78,5 cm
Maximum angle of the backrest	70°
Maximum thighrest angle	34°
Ergoframe of the back and thight rest	10 + 6 cm
Trendelenburg / Antitrendelenburg positions	12° / 12°
Maximum weight of bed	125 kg
Safe Working Load (SWL) (including mattress and accessories) 125 mm castors	 200 kg
Safe Working Load is sum of weights: patient mattress + accessories	 165 kg 20 + 15 kg
Maximum lifting pole load	75 kg
Controlling Lever Duty Cycle (INT.:)	2 minutes ON /18 minutes OFF
Environmental conditions - operation Temperature Humidity Atmospheric pressure	 +10 °C — +40 °C 30 — 75 % 795 — 1060 hPa
Environmental conditions – storage and transport Temperature Humidity Atmospheric pressure	 -20°C — -50°C 20 —90% (non-condensing) 795 — 1060 hPa

7 Use Conditions

The bed may not be used and stored in indoor environments:
- Where there is a risk of explosion.
- Containing inflammable anaesthetics.

The bed is designed for use in rooms for medical purposes.

8 Scope of Delivery and Bed Variants

8.1 Scope of Delivery

Delivery:
- The bed is delivered completely assembled. Upon receipt check that the shipment is complete as specified on the delivery note. Notify the carrier and supplier of any deficiencies or damages immediately as well as in writing or make a note on the delivery note.

8.2 Bed Variants

Features – Praktika 2 1F (model number is located on the serial label)

s = standard
o = optional

- Mattress platform
  - Mattress platform consisting of steel parts (s)
  - Mattress platform consisting of removable plastic parts (o)
- Siderails
  - Without siderails (s)
  - Split plastic siderails (o)
  - Single collapsible siderails (o)
- Head Board and Foot Board
  - Removeable head board and foot board with coloured inserts (s)
- Castors
  - 125 mm Tente Motion with individual brake (s)
  - 125 mm Tente Motion with single axle brake (o)
- Control Elements
  - Controlling levers for back / foot rest setttings (s)
  - Lever for setting Trendelenburg / Antitrendelenburg position (o)
- Other
  - One pair of universal accessory holder (o)
  - Segufix holders (o)
  - Protector® (o)
  - Extender® (o)
  - Lifting pole holder (s) (head end)
  - Accessory holder (o) (foot end)
- Powder Coating Colours
  - Powder coated steel parts – RAL 9002 (white) (s)
  - Powder coated steel parts – RAL 9006 (grey) (o)

9 Putting into Service

WARNING!
Risk of injury when working on the bed!
- ► Ensure that the bed is disconnected from the mains connection prior to putting into service, putting out of service and maintenance.
- ► Ensure that the castors are locked prior to putting into service, putting out of service and maintenance.

CAUTION!
Material damage due to incorrect putting into service!
- ► Ensure that putting into service is performed exclusively by manufacturer´s customer service or trained hospital personnel.

Set up the bed as follows:
- ► Unpack the bed.
- ► Check the delivery (see Scope of Delivery).
- ► Install equipment and accessories.
- ► Move the bed only on suitable floor surfaces. (see Transport – Suitable surfaces)
- ► Ensure all the required mechanical mechanisms are available and working.

9.1 Head Board and Foot Board

WARNING!
Risk of injury when inserting the head board and foot board!
► Always hold head board and foot board by their top corner handles with both hands when installing or removing.
► Install head board and foot board before the first use.

WARNING!
Risk of injury due to incorrectly installed head board and foot board!
► Ensure head board and foot board are correctly inserted, especially when moving the bed.
► Ensure head board lock and foot board lock are locked, especially when moving the bed.

WARNING!
Risk of injury when removing the head board and foot board!
► Before removing head board and foot board, ensure siderails are folded down and there are no accessories attached to the head board and foot board.
► If a patient is lying in a bed with the head board and/or foot board removed, supervise the bed at all times.

WARNING!
Material damage due to excess load!
► Ensure nobody sits on the head board and foot board.

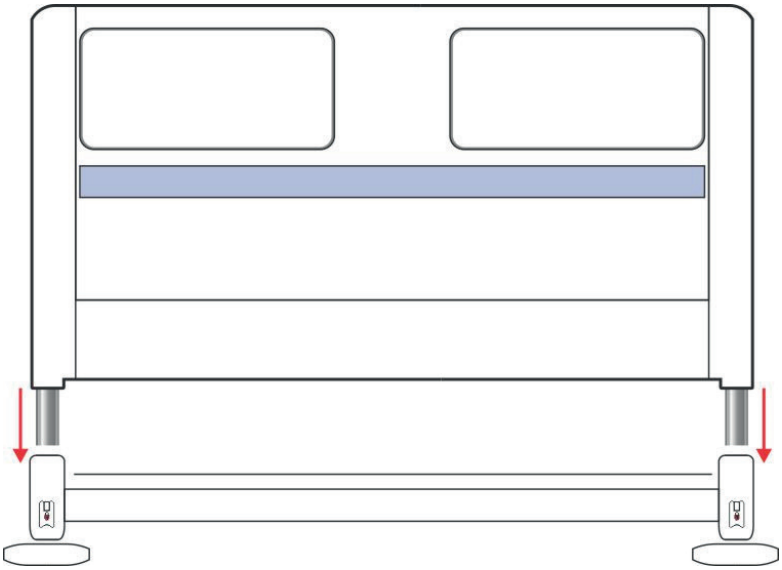

Fig. Installation of head board and foot board

Install head board or foot board as follows:
► Insert head board or foot board to its bushing in the direction of arrow. Decor must face out the bed.
► Lock head board and foot board (2).

Remove head board or foot board as follows:
► Unlock head board or foot board (1).
► Remove the head board or foot board upwards.

NOTE: It is possible to install head board or foot board to the bushings with locked locks.

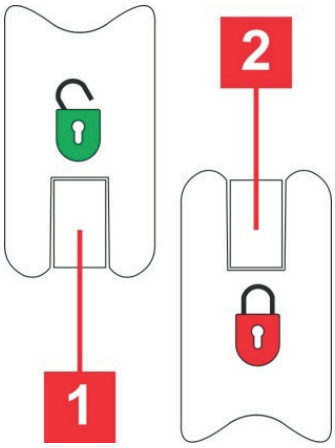

Fig. Positions of head board lock and foot board lock

Head board lock and foot board lock are placed on the bushing for head board and foot board.

1. **Unlocked**
2. **Locked**

9.2 Mattress support platform

Mattress platform of Praktika 2 bed can bed made of fixed steel parts or optionable with removable plastic parts.

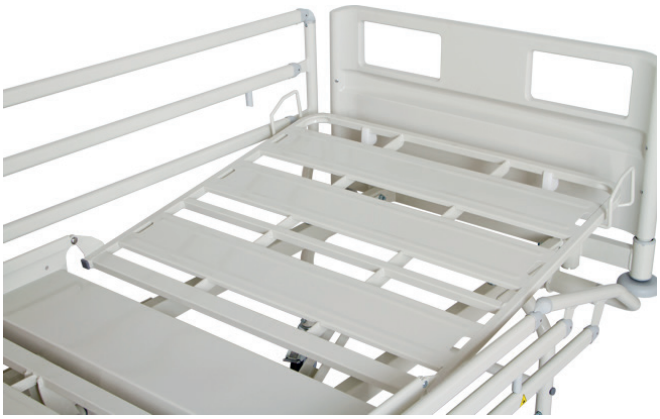

Fig. Steel mattress platform

Fig. Mattress platform with removable plastic parts

9.3 Initial Operation

Prepare the bed for service as follows:

- ► Check the functionality of positioning functions (backrest, thighrest and calfrest).
- ► Check the functionality of castors and its braking.
- ► Check if it is possible to remove head board and foot board.
- ► Check the functionality of siderails.

9.4 Transport

Observe the following for safe transport:

- ► Ensure the castors are unlocked before moving the bed during the loading/unloading process (see Castor Control and Bed Transport).
- ► Ensure the siderails are lifted and locked while the patient is on the bed during the transport.
- ► Move the bed only on suitable floor surfaces.

Suitable surfaces:

- ■ Tile
- ■ Hard linoleum
- ■ Hard flooring

Unsuitable surfaces:

- ■ Soft, unsealed or defective flooring
- ■ Soft wooden flooring
- ■ Soft and porous stone floors
- ■ Carpeted floors with underlay
- ■ Soft linoleum
- ■ Ensure the brakes are released while moving the bed.

10 Manipulation – Bed Positioning

WARNING!
Risk of injury when adjusting the bed!
► Secure or remove any items on the bed.

The bed is controlled via two control levers which are plaved on the bar under foot board of the bed.

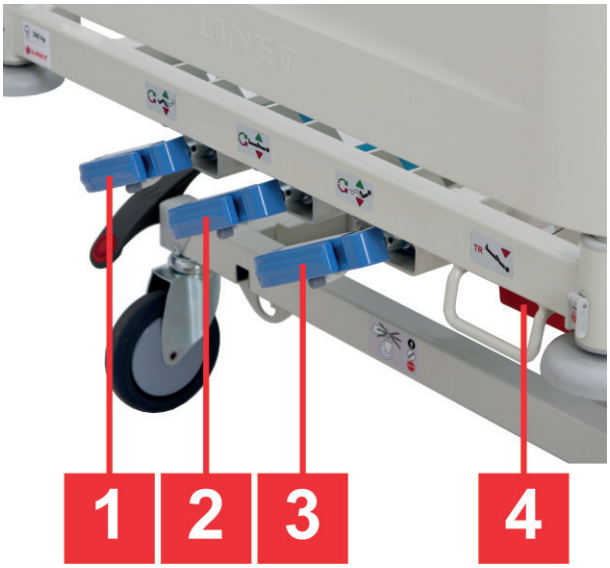

1. Controlling lever – thighrest positioning
2. Controlling lever – bed height positioning
3. Controlling lever – backrest positioning
4. Lever – Trendelenburg / Antitrendelenburg positioning

Fig. Control levers

10.1 Positions of Levers

WARNING!
Risk of damaging the bed during transport!
► Always set both levers into transport position before transporting the bed or when finished with bed positioning. Otherwise there is a risk of damaging the levers followed by disfunction of positioning functions.

Fig. Controlling Levers - transport position

Fig. Controlling Lever - working (controlling) position

10.2 Manipulation with Levers

CAUTION!
Risk of damaging the lever mechanism due to incorrect use!
► Always pull the lever completely before positioning the bed.

CAUTION!
Risk of damaging the lever mechanism due to incorrect use!
► If you feel more resistance than usual when turning the lever, stop turning the lever further.

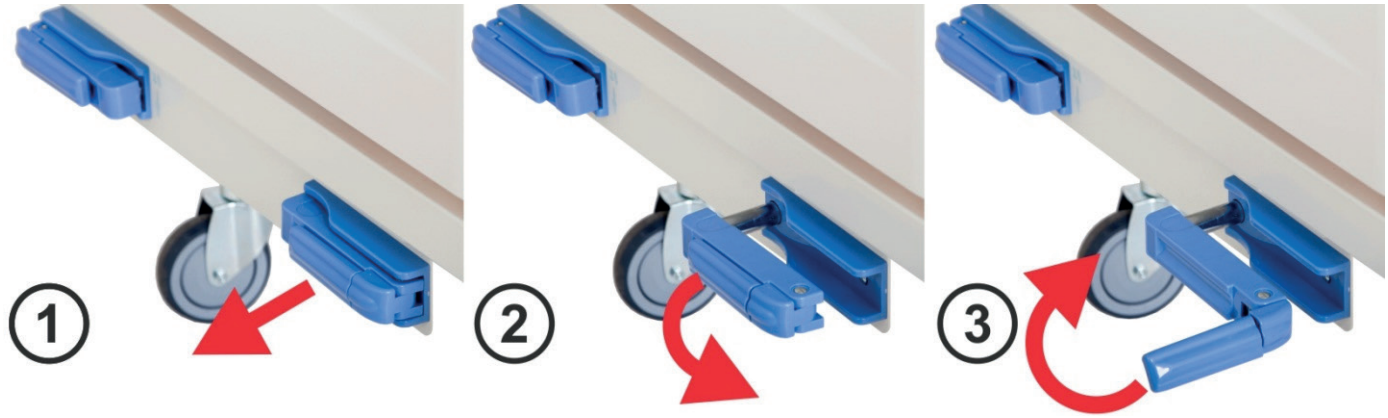

Fig. Setting the lever to the working position

Set the lever to the working position as follows:
► Grab and pull the lever toward you (1).
► Tilt the handle toward you (2).
► Rotate the lever clockwise to (3) to raise height adjustment of the back/thighrest. Rotate the lever counterclockwise lower height adjustment of the back/thighrest.

Set the lever to transport position as follows:
► Set the lever to transport position by reversing the process described above (2 and 1).

10.3 Bed Positioning

WARNING!
Risk of injury while positioning the bed!
► Ensure no objects are trapped between moving parts of the bed and mattress platform.
► Ensure no objects are trapped between moving parts of the mattress platform and undercarriage frame.
► Secure or remove any items on the bed.
► Ensure no persons or body parts are close to the bed or accessories (e.g. infusion stand, lifting pole) when the mattress platform is moving.
► Ensure no objects are close to the bed or accessories (e.g. infusion stand, lifting pole) when the mattress platform is moving.
► It is recommended to keep only one of the levers in working position. Otherwise collision between levers may occur.
► Stop rotating the lever when you feel higher resistance from the lever in the final positions.

10.3.1 Backrest Positioning

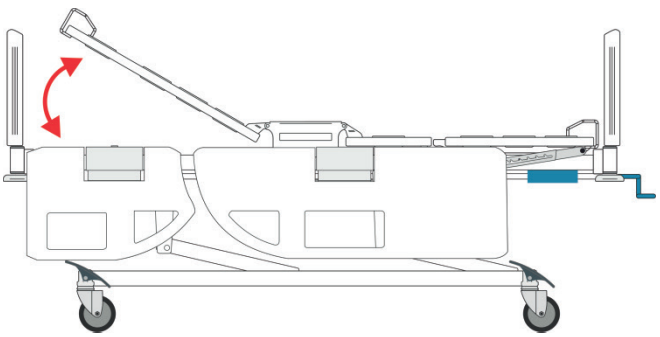

Fig. Backrest positioning

It is necessary to set lever into its working position (see Manipulation with levers).

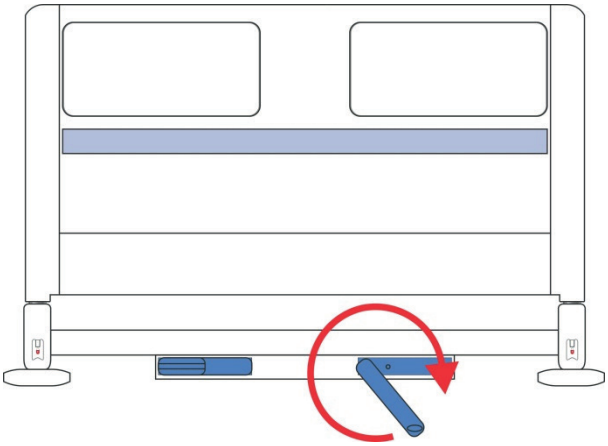

Fig. Raising the backrest

Raise the backrest as follows:

► Set the right ever to its working position.

► By rotating the lever clockwise, raise the backrest to desired position.

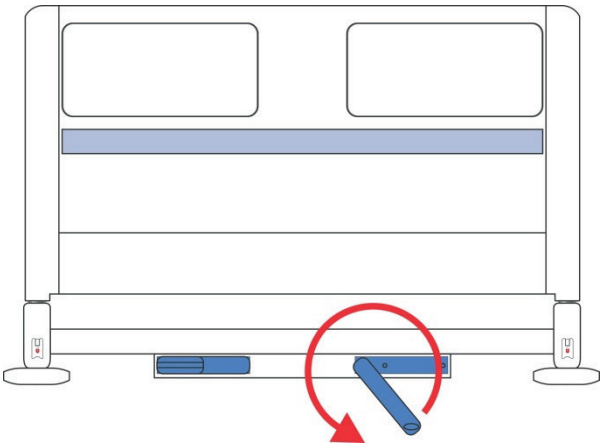

Fig. Lowering the backrest

Lower the backrest as follows:

► Set the right lever to its working position.

► By rotating the lever counterclockwise, lower the backrest to desired position.

10.3.2 Thighrest Positiong

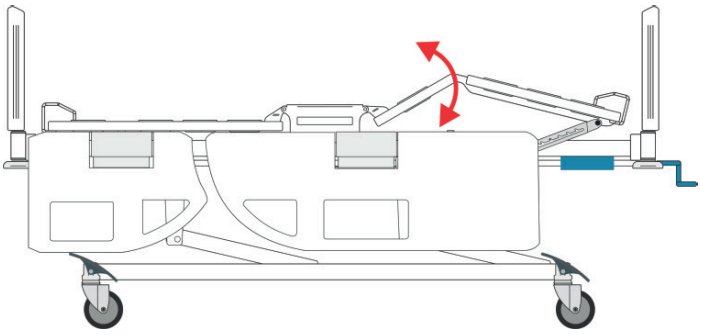

Fig. Thighrest positioning

It is necessary to set lever into its working position (see Manipulation with levers).

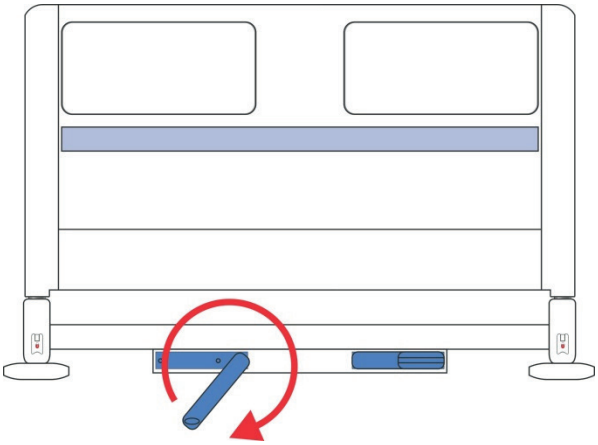

Fig. Raising the thighrest

Raise the thighrest as follows:

► Set the left lever to its working position.

► By rotating the lever clockwise, raise the thighrest to desired position.

NOTE: Calfrest is positioned simultaneously when positioning thighrest depending on the position of raster. Positioning by raster is described in chapter Mechanical positioning of calfrest.

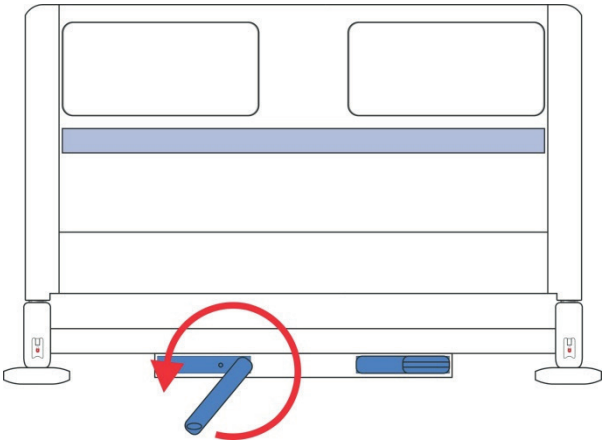

Fig. Lowering the thighrest

Lower the backrest as follows:

- ► Set the left lever to its working position.
- ► By rotating the lever counterclockwise, lower the thighrest to desired position.

10.3.3 Bed Height Positiong

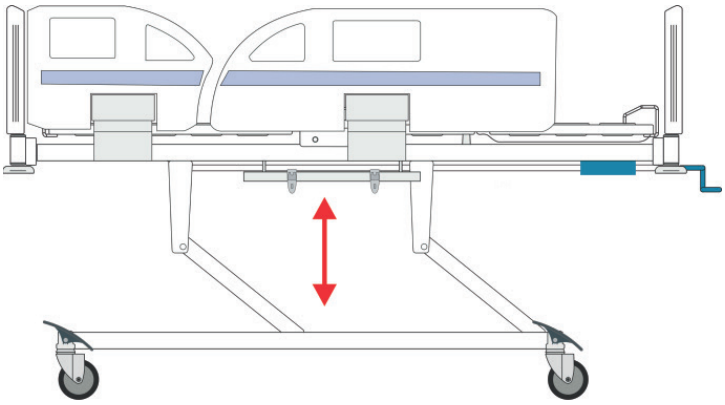

Fig. Thighrest positioning

It is necessary to set lever into its working position (see Manipulation with levers).

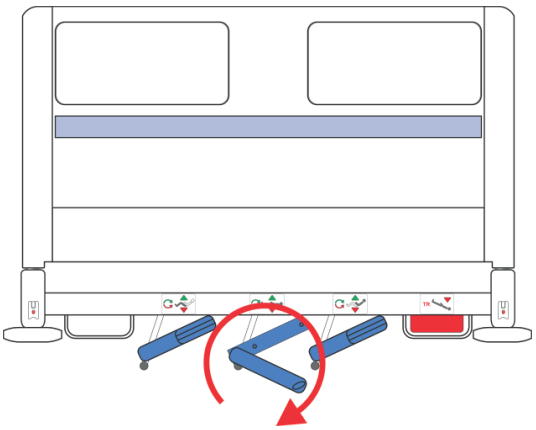

Fig. Raising the bed height

Raise the bed height as follows:

- ► Set the left lever to its working position.
- ► By rotating the lever clockwise, raise the bed to desired height.

NOTE: Calfrest is positioned simultaneously when positioning thighrest depending on the position of raster. Positioning by raster is described in chapter Mechanical positioning of calfrest.

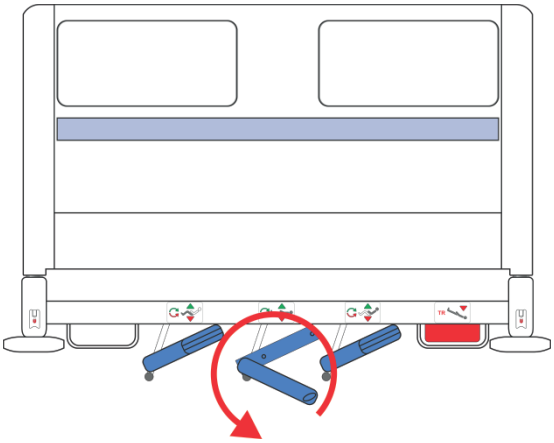

Fig. Lowering the bed height

Lower the bed as follows:

- ► Set the left lever to its working position.
- ► By rotating the lever counterclockwise, lower the bed height to desired position.

10.3.4 Mechanical positioning of calfrest

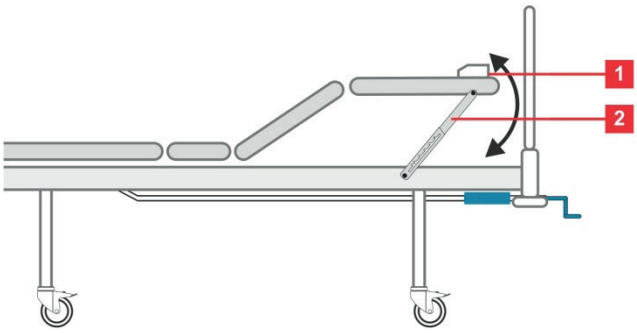

Fig. Calfrest positioning

Calfrest can be positioned mechanically using raster.

1. Mattress holder / Calfrest handle
2. Mechanical raster

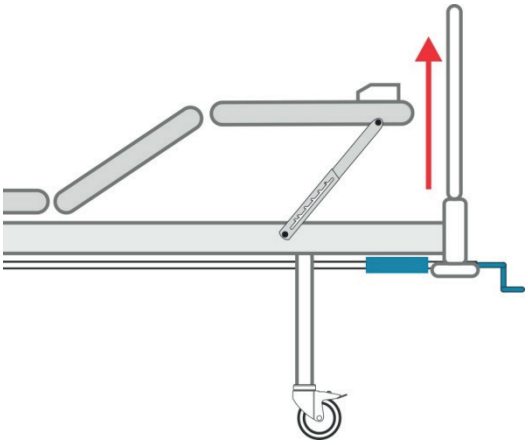

Fig. Raising the calfrest

Raise the calfrest as follows:

- ► Grab the calfrest handle 1.
- ► Pull the handle upwards until desired position is reached.
- ► Ensure that pin is locked in its place.

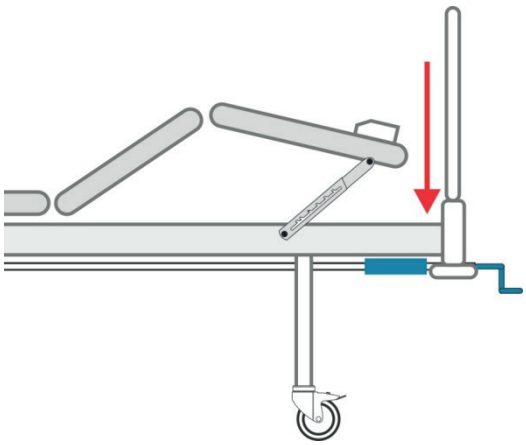

Fig. Lowering the calfrest

Lower the calfrest as follows:

- ► Grab the calfrest handle 1.
- ► Pull the calfrest to its highest position and then lower the calfrest to its lowest position.

10.3.5 Trendelenburg / Antitrendelenburg position

WARNING!
Risk of damaging the lever mechanism due to incorrect use!
- ► Always ensure before positioning that foot board is locked.
- ► Positioning of heavier patients (100kg and more) should be performed by two persons.

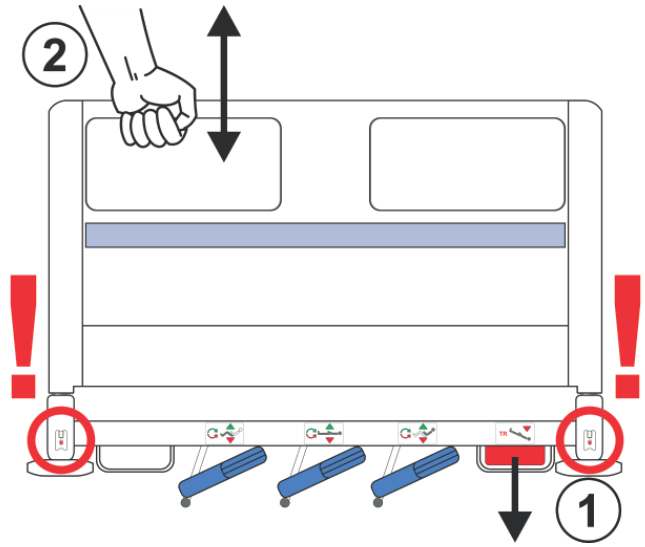

Fig. Positioning the bed to Trendelenburg / Antitrendelenburg positions

Red lever on the right side of foot board is designed for positioning the bed to Trendelenburg / Antitrendelenburg positions.

NOTE: If is not possible to position the bed to TR/ATR position then slighty push foot board down and simultaneously pull the red lever – the locking mechanism will be released and it will be to possible to position the bed to TR/ATR positions.

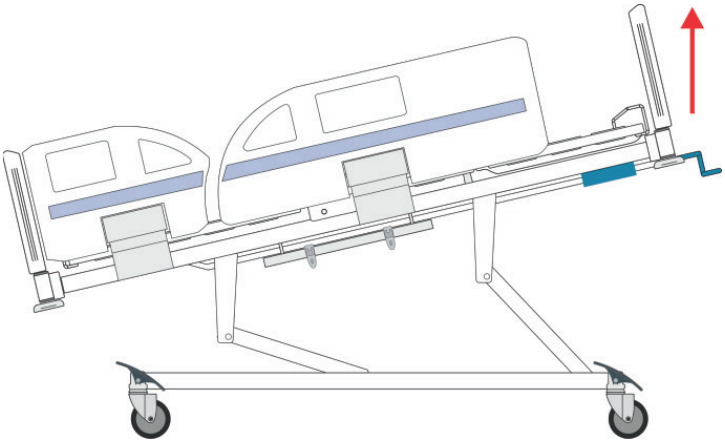

Fig. Trendelenburg position

Set the Trendelenburg position as follows:
- ► Ensure head board and foot board are locked.
- ► Position the bed to approx. 20 cm above the lowest position.
- ► Pull and hold the red lever towards yourself and simultaneously grab the top edge of the foot board and by pulling it upwards reach the Trendelenburg position.
- ► Release the red lever in the desired angle of tilt. By slight change of the tilt reach the locked position.
- ► Ensure the mattress platform is locked by pulling the foot board up and down.

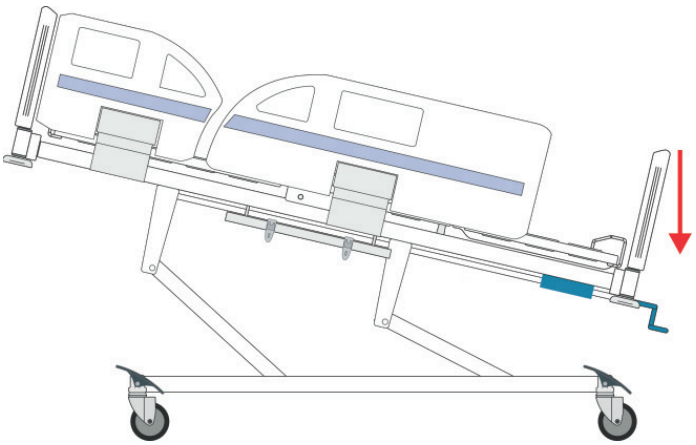

Fig. Antitrendelenburg position

Set the Antitrendelenburg position as follows:
- ► Ensure head board and foot board are locked.
- ► Position the bed to approx. 20 cm above the lowest position.
- ► Pull and hold the red lever towards yourself and simultaneously grab the top edge of the foot board and by pulling it down reach the Antitrendelenburg position.
- ► Release the red lever in the desired angle of tilt. By slight change of the tilt reach the locked position.
- ► Ensure the mattress platform is locked by pulling the foot board up and down.

10.4 Quick Backrest Lowering for the Crisis Situations

WARNING!
Risk of injury due to lowering the backrest too quickly!
- ► Ensure single collapsible siderails are in their lowest position.
- ► Ensure split plastic siderails are in their highest position.
- ► Ensure there are no body parts between siderails and backrest.

The bed allows quick mechanical lowering of the backrest using quick counterclockwise rotatition of the right lever. Backrest will lower to horizontal position after approx. 30 seconds.

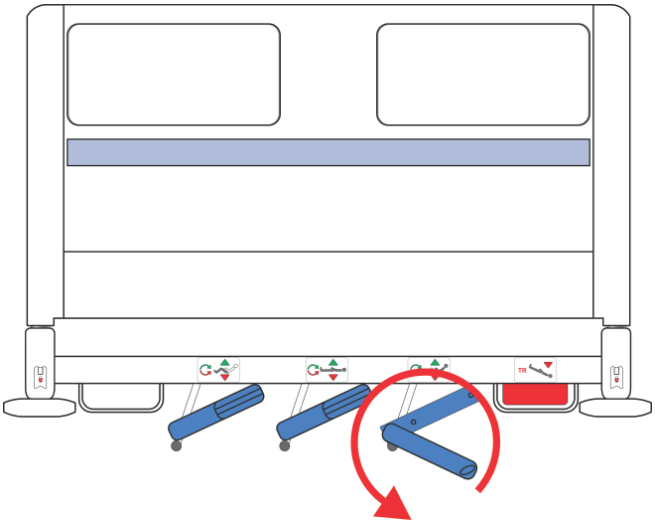

Fig. Quick lowering of the backrest

Mechanical lowering of the backrest:
- ► Set the right lever to its working position.
- ► By quick rotation of the lever counterclockwise lower the backrest to horizontal position.

11 Siderails

WARNING!
Risk of injury due to crushing!
- ► Ensure that there are no objects or body parts between siderail and mattress platform when folding the siderail up or down.
- ► Ensure that no body part or objects are under the siderail when folding the siderail down.
- ► It is necessary to take extra care and attention when locking the siderails in the top position. Hospital staff must ensure the siderail is locked in its highest position by pushing the siderail to head and foot board of the bed. The risk of spontaneous folding of the siderail may occur when the siderail is not properly locked and it can injure the patient, staff or the third parties.

WARNING!
Risk of injury due to patient falling out of bed!
- ► Ensure that folded-up siderails are securely anchored. Press against siderails from inside in order to check stability.
- ► Hospital personnel are responsible for ensuring siderails are folded-up when the bed is occupied.

Siderails are components of the bed and cannot be dismounted. The hospital personnel is responsible that siderails are locked in the highest position when the patient is on the bed.

Siderail types:
- ► Without siderails
- ► Single collapsible siderails – controlled from bottom
- ► Split plastic siderails

11.1 Single Collapsible Siderails – Controlled From Bottom

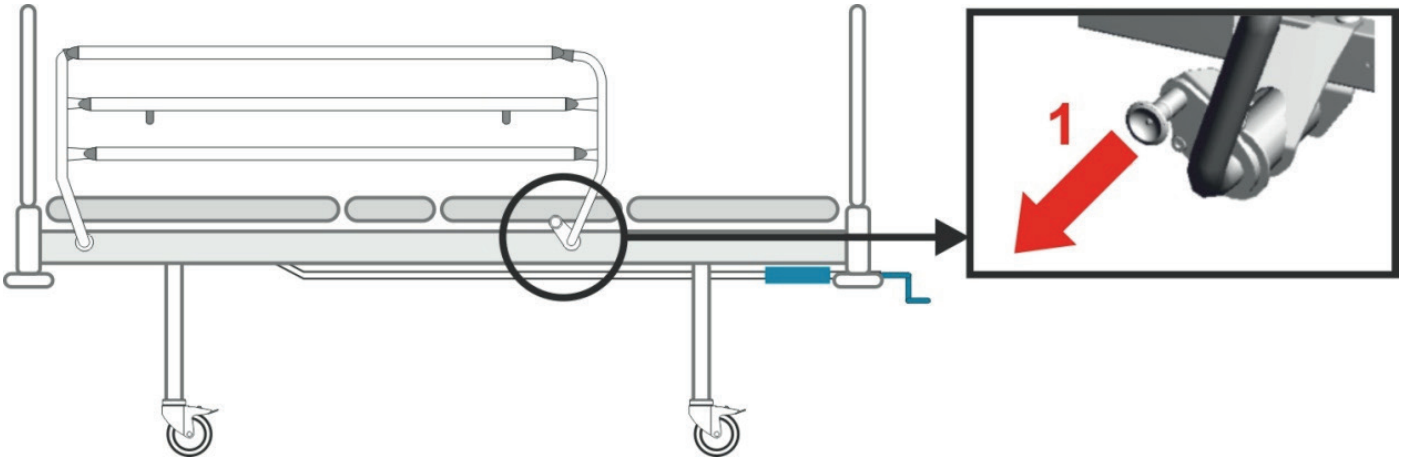

Fig. Siderail manipulation - Single collapsible siderails controlled from bottom

Fold siderails down as follows:
- ► Pull out the lever 1 toward yourself.
- ► Push the siderail towards foot board of the bed.
- ► To fold siderail up push the siderail up. Siderails will click in into place and lock automatically (audible “click” will be heard).

11.2 Split Plastic Siderails

Fold siderails down as follows:

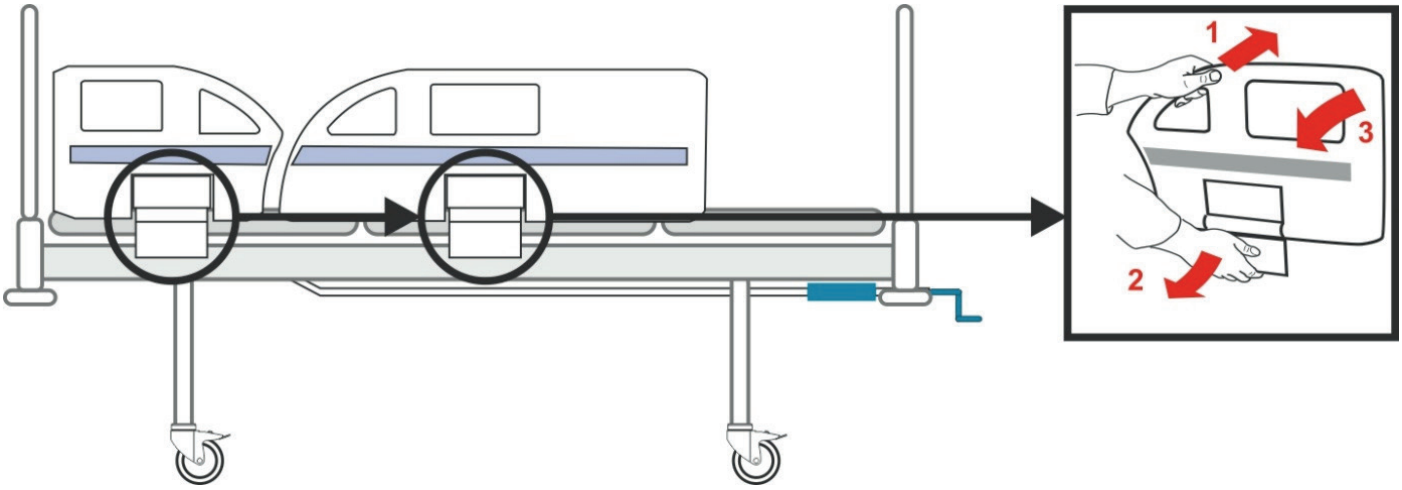

Fig. Siderail manipulation – Split plastic siderail

► Grab the upper handle of the siderail and push towards mattress platform 1.
► Pull out the locking mechanism 2 to unlock.
► Fold the siderail down 3.

NOTE In certain cases (e.g. when there is no weight on the siderails), it is possible to unlock the split plastic siderail only be pulling out the locking mechanism 2. This does not mean that the mechanism is faulty. The manufacturer recommends always using the procedure described above.

Fold siderails up as follows:
► Grab the siderail by the upper part of its handle.
► Pull siderail until it latches.
► The locking of each siderail is indicated by an audible ‘click‘when locked in place.
► Ensure that the siderail is locked properly.

12 Castor Control and Bed Transport

WARNING!
Material damage due to incorrect transport or involuntary movement!
► Prior to assembly, disassembly and maintenance, ensure the castors are locked.
► Ensure the castors are locked while the bed is occupied and/or not being transported.
► Have the bed transported only by nursing or trained personnel.
► Ensure that all castors are braked if the bed is not being transported.

WARNING!
Risk of damaging the bed during transport!
► Always set both levers into transport position before transporting the bed. Otherwise there is a risk of damaging the levers followed by disfunction of positioning functions.

Castor types:
► Castors with individual brake
► Castors with single axle brake at the foot end, 2 castors with individual brake at head end

Bed transport:
► Fold the siderails up.
► Transport the bed using handles on the head board/foot board.

12.1 Castors with Individual Brake

Castors are unbraked

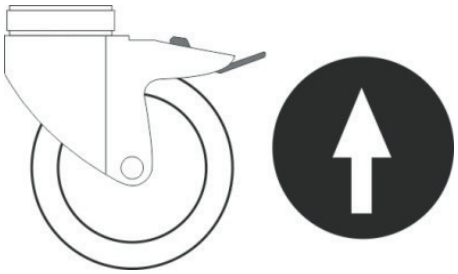

Castors are braked

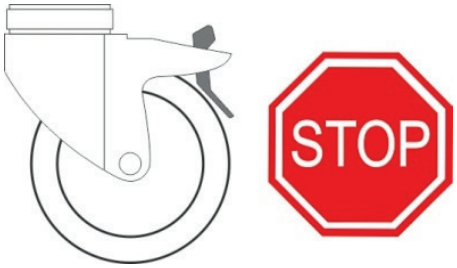

Fig. Castor with individual brake

12.2 Castors with Single Axe Brake

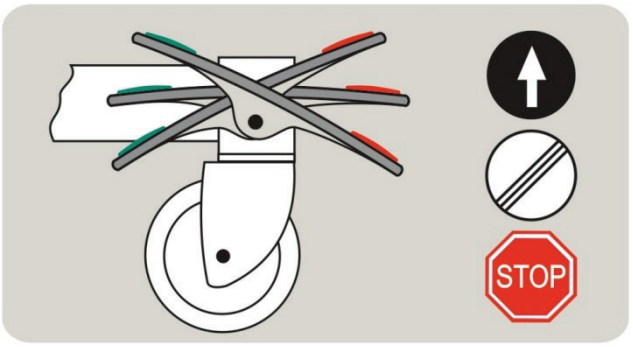

Fig. Castor with central brake system

The bed is equipped with central brake system. Braking levers are located on the both sides of the bed. Central brake system is designed for easier castor control.

Castor control:

1. Forward movement: The front left castor is locked. The bed moves straight ahead.
2. Unrestricted movement: All of the castors are unlocked.
3. Braked: All of the castors are locked.

13 Equipment

13.1 Accessory Rail

WARNING!
Risk of injuring the personnel, patients or risk of damaging the bed due to incorrect placement of the accessories!

► Always ensure the accessory placed on the accessory rail is not in collision with bed or with patient.

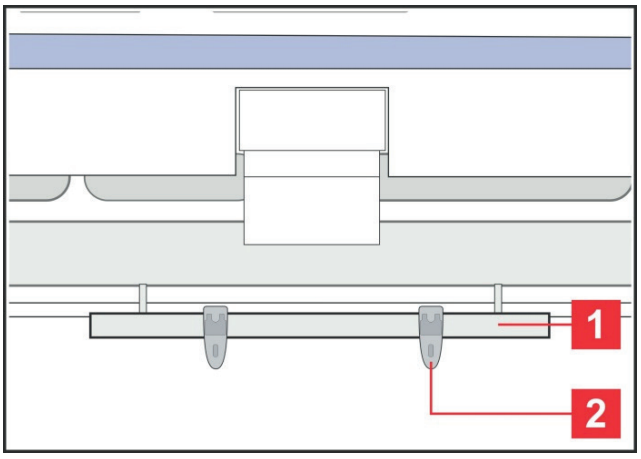

Fig. Accessory rail

Accessory rail 1 is placed on both sides in the middle of the bed. Each rail contains two hooks 2 which are designed for holding different types of accessory.

Load capacity:

- Maximum load per hook is 5 kg
- Maximum load per rail is 10 kg

Accessories suitable for accessory rail:

- Urinary bag (holder)
- Urinary bottle (holder)
- Cannula holder
- Redon bottle holder

14 Mattress

The manufacturer recommends the use of the following mattress systems on the Praktika 2 bed:

- **EFFECTACARE 10**
- **EFFECTACARE 20**
- **PRIMACARE 10**
- **PRIMACARE 20**
- **CLINICARE 10**
- **CLINICARE 20**
- **CLINICARE 30**

15 Accessories

WARNING!
Risk of injury due to incompatible accessories!
► Only the manufacturers original accessories can be used.
► The manufacturer assumes no responsibility for the use of accessories not approved by the manufacturer.

NOTE: All accessories conform to IEC 60601-2-52.

The following accessories are suitable for Praktika 2:
- Accessory rail
- Lifting pole
- Infusion stand
- Protector®
- Extender

15.1 Bushings for Accessories

Bushings for accessories are placed in the corners of bed head end.

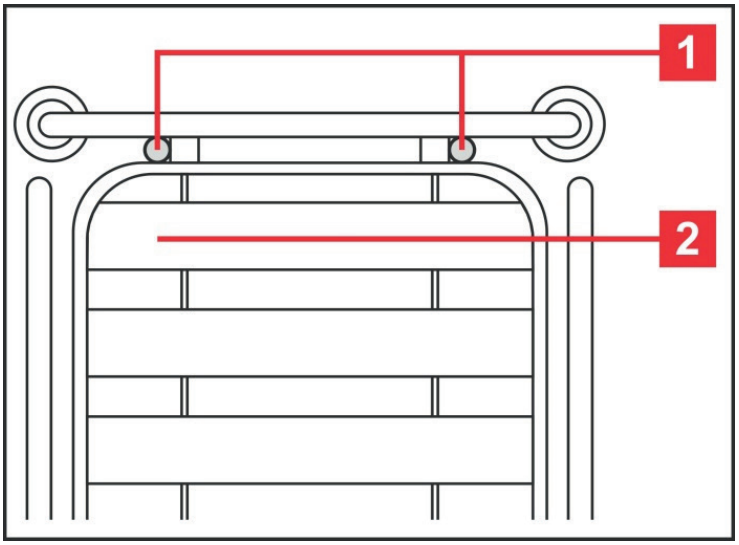

Fig. Bushings for accessories placement

Following accessories can be placed int o bushings:
- Lifting pole
- Infusion stand

1. Bushings for accessories placement
2. Backrest

15.2 Lifting Pole

WARNING!
Risk of patient‘s injury or damage to the bed due to incorrect use!

- ► Never exceed the maximum load of lifting pole – 75 kg.
- ► Never use the lifting pole for rehabilitation exercises.
- ► To prevent the bed from tipping over, ensure the lifting pole does not project out from the bed.
- ► Replace plastic grab handle every 4 years.
- ► The lifting pole is not designed for hanging any kind of accessories, controllers etc. except triangular holder.

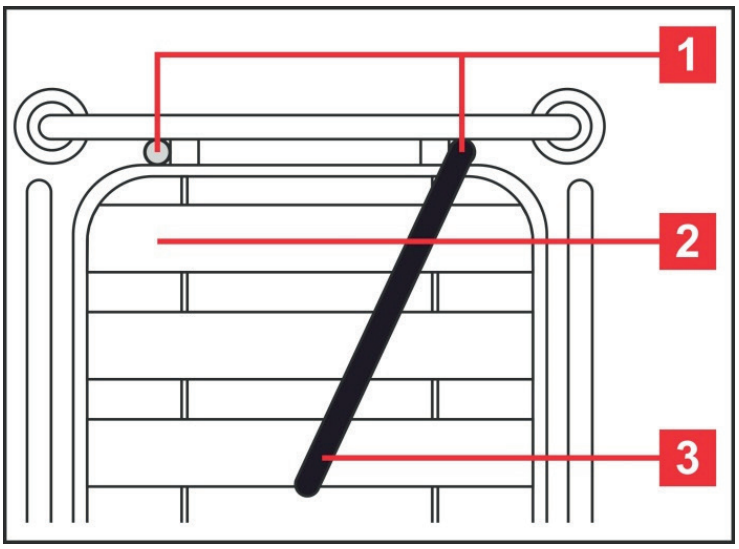

Fig. Lifting pole (top view)

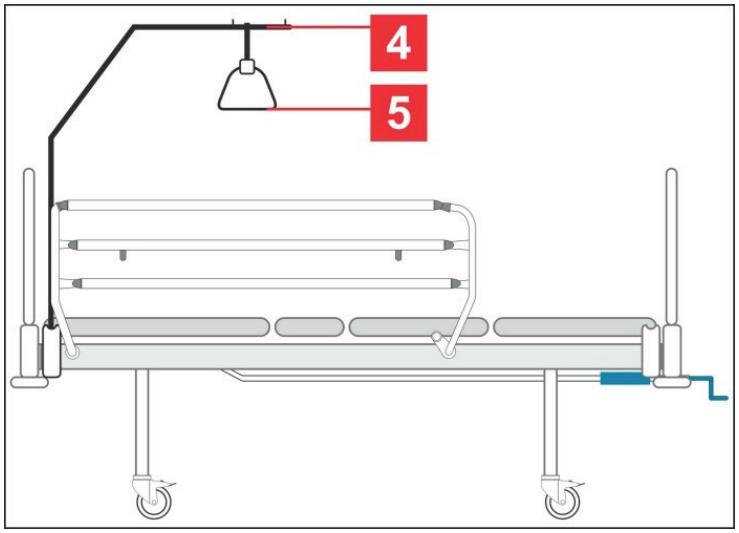

Fig. Lifting pole (side view)

1. Bushings for lifting pole placement
2. Backrest
3. Lifting pole in working position (top view)
4. Lifting pole in working position (side view)
5. Grab handle

Lifting pole innstallation:

- ► Insert lifting pole 3/4 to one bushings 1 in the head end corners.
- ► Ensure the safety pin locks are in place.
- ► Hang the plastic grab 5 handle on the lifting pole.

Placement:

- ► In the bushing for lifting pole on the head end.

Load capacity:

- ► Maximum load of liftin pole is 75 kg.

Lifting pole positions:

- ► Over the backrest 4 (working position)
- ► Parallel to the head board (when not in use)

NOTE Lifting pole is not a part of delivery and needs to be ordered separately.

NOTE The date of manufacture is marked on the plastic grab handle. Replace the handle every 4 years.

15.3 Infusion Stand

WARNING!
Risk of injury or collision when placing other accessories than described in the instructions for use!
► Use infusion stands exclusively for accessories listed in the instructions for use.
► Only mount an infusion pump to the lower (wider) telescopic section of an infusion stand above the head board / foot board.
► Never mount an infusion pump to the upper (thiner) telescopic section of an infusion stand.
► Ensure the infusion pump will not collide with any movable parts of the bed (especially Backrest part) or with the patient. This must be verified during installation.
► Do not use the infusion stand as driving/pushing device during the bed transport.
► In case of failure to comply those instructions there is a risk of collision of accessories with movable parts of the bed or injury of the patient.

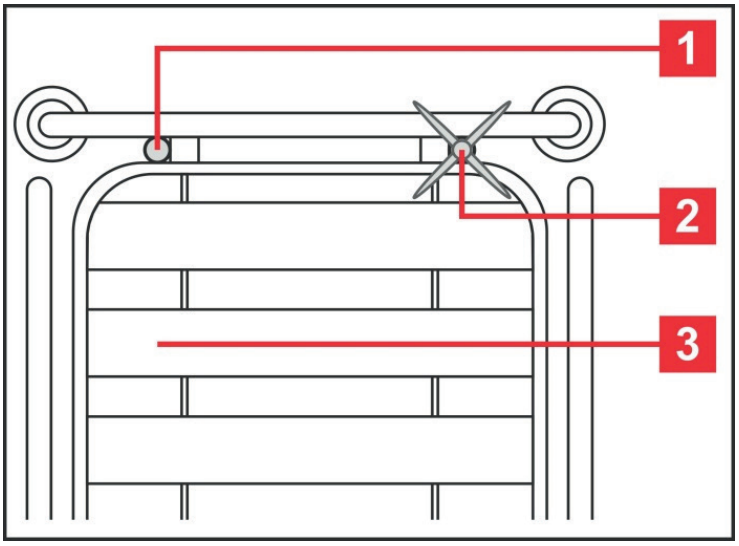

Fig. Infusion stand (top view)

1. Bushings for infusion stand placement
2. Installed infusion stand (top view)
3. Backrest
4. Installed infusion stand (side view)

Installation:
► Insert infusion stand to one bushings 1 in the head end corners.
► Ensure the safety pin locks are in place.

Infusion stand placement:
► In the bushing for infusion stand on the head end.

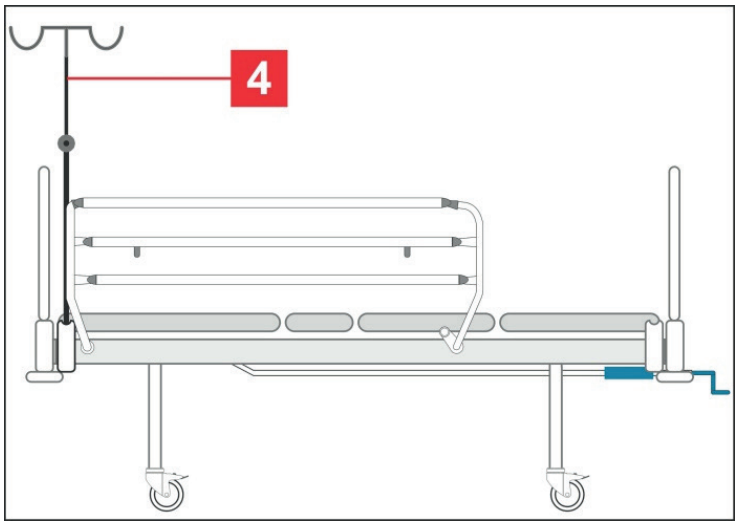

Fig. Infusion stand (side view)

Use:
► Use infusion stands only for hanging infusions and baskets for intravenous solutions.

Load capacity:
► Maximum load capacity per hook: 2 kg.
► Maximum load capacity of infusion stand: 20 kg.

NOTE Ensure the maximum load of infusion stand or single hook is not exceeded.

15.4 Protector®

WARNING!
Risk of injury due to patient falling out of bed!
- ► Ensure the Protector® is securely anchored to the bushing.
- ► To check stability, push the Protector® up without touching the release button.
- ► Always check the siderail is properly locked.

WARNING!
Risk of damaging the bed or injuring the patient!
- ► Do not mount head board or foot board to Protector® bushing (3).
- ► Do not mount lifting pole to Protector® bushing (3).

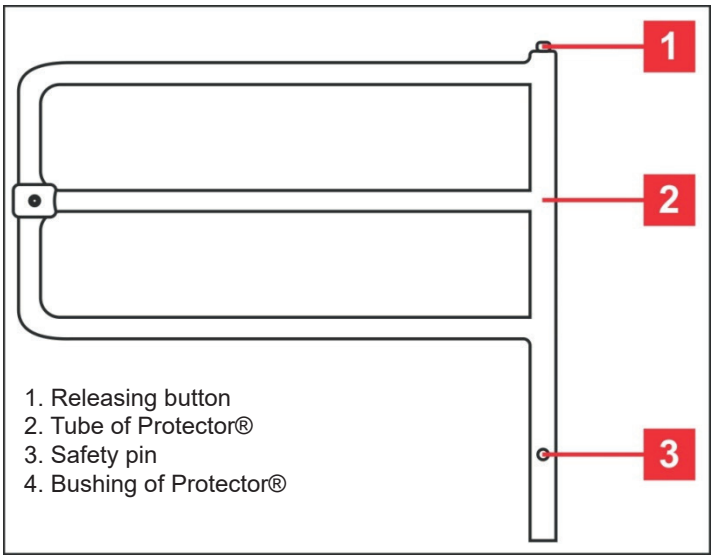

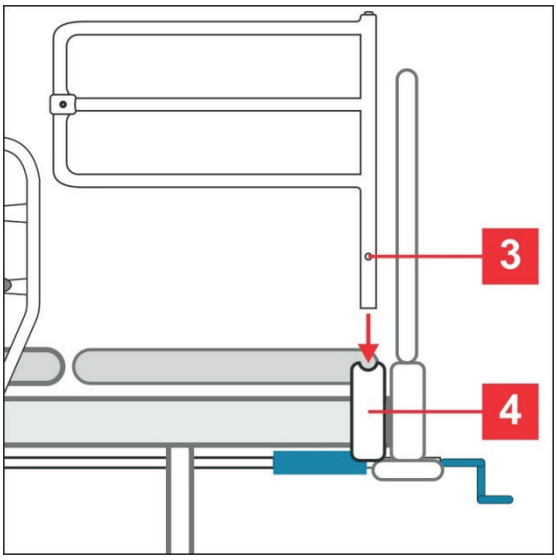

Fig. Protector® - description and installation

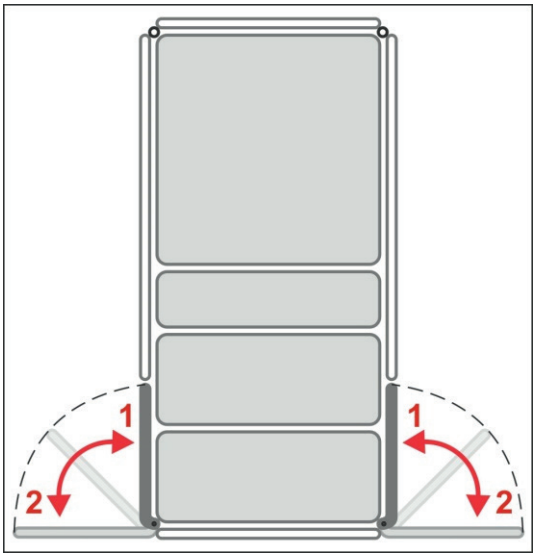

Fig. Protector® positions

Install Protector® to closed position as follows:
- ► Insert tube of Protector® 2 to the bushing 4 near foot board so the Protector® is facing the siderail.
- ► Safety pin 3 must be locked in place 4.

Install Protector® to opened position as follows:
- ► Insert tube of Protector® 2 to the bushing 4 near foot board so the Protector® is facing out from the bed.

Uninstall Protector® as follows:
- ► Press and hold the releasing button 1.
- ► Pull the Protector® upwards.

1. Closed position
2. Opened position

15.5 Extender – for Single Collapsible Siderails

WARNING!
Risk of injury or collision due to incorrect use!

- ► Extender can be used only with single collapsible siderails. Manufacturer will held no responsibility due using the Extender with different types of siderails.
- ► Movement of the bed must be considered if the Extender is installed.
- ► Use of the Extender in other manners than described in the instructions for use is on the responsibility of hospital personnel. Manufacturer will held no responsibility for incorrect use.

Extender is adapte for siderails. It is recommended to use Extender when placing higher mattress on the bed than recommended by manufacturer. Extender will raise the height of siderails and also safety of the patient during sleep time. Extender is designed for single collapsible siderails only.

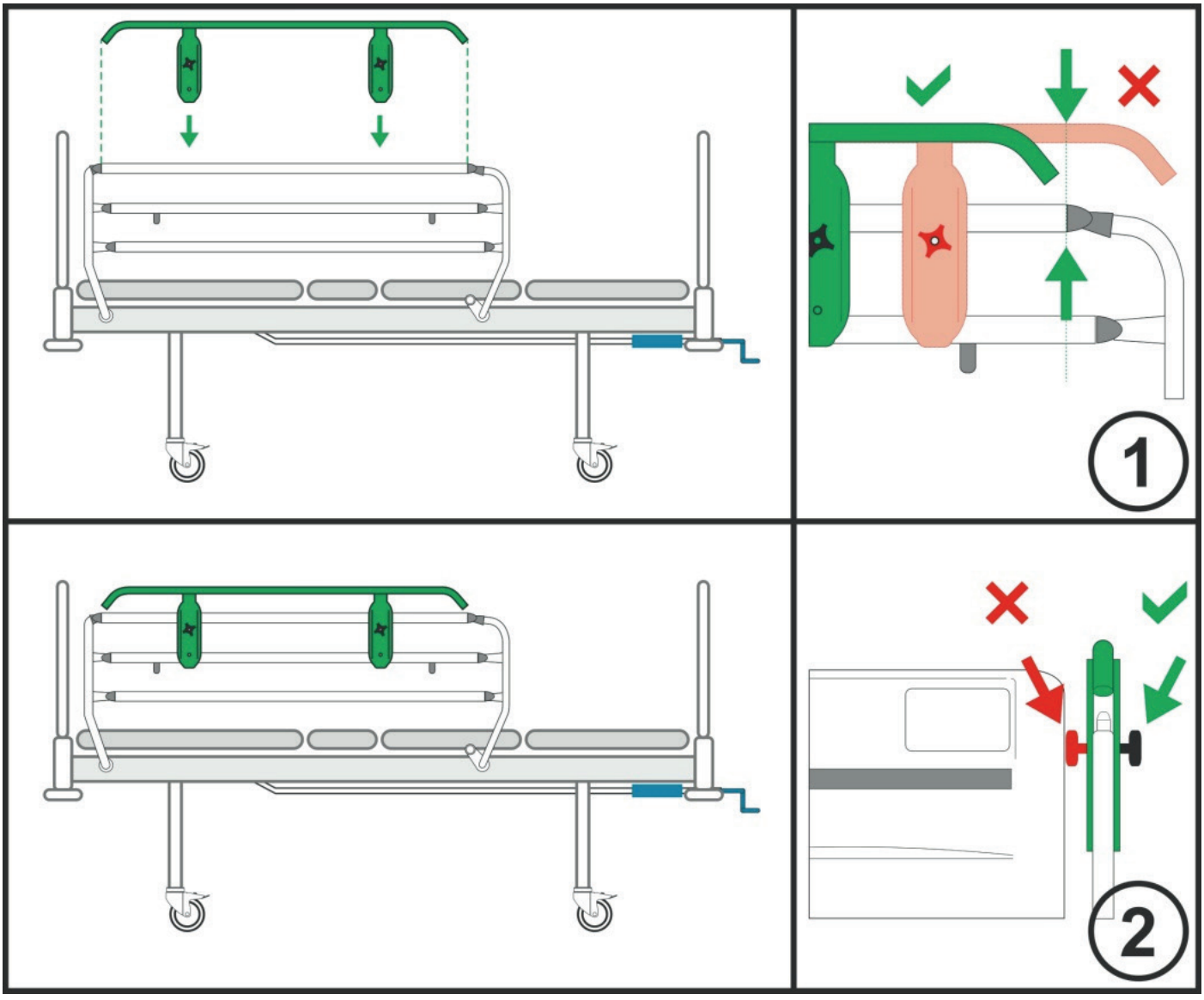

Fig. Extender installation

Extender installation:

- ► Place the Extender® (without securing screws) on the upper edge of the siderail (**1**)
- ► Sid rails must be folded up in highest position. Square hole of Extender is pointed on the mattress platform.
- ► Insert screws from the inside of the bed thru the square holes of the Extender.
- ► Secure the screws with plastic rosette nuts and tighten (**2**). Nuts are facing out the bed.
- ► Check the Extender is secured properly by pushing it sideways.

16 Cleaning/Disinfection

WARNING!
Risk of injury when working on the bed!
- ► Pay extra attention when cleaning any movable or controlling mechanisms of the bed to prevent invol-untary activation, entrapping or crushing.
- ► Cleaning should be entrusted to the person who has been trained to control the bed.

WARNING!
Risk of damaging the bed due to use of incorrect cleaning detergents or cleaning processes!
- ► The bed is not designed for machine washing.
- ► The bed is not designed for cleaning by spraying, showering nor for pressure or steam cleaners.
- ► The selection of cleaning detergents/disinfections and their correct concentration is responsibility of responsible person in charge of cleaning/disinfection in accordance with the informations provided in the instructions for use.
- ► Never use germicidal or other radiants for disinfection of the bed, if those radiants act directly on the bed.
- ► Follow these instructions and follow the prescribed dosage by the manufacturer of cleaning detergents.
- ► Not following recommended processes may result in damaging or deterioration of the bed condition.
- ► **Check if used cleaning agents and disinfectants are compatible with materials that the product consists of! For information see the following table.**

BED COMPONENTS THAT ARE INTENDED TO BE CLEANED Do not clean what is not mentioned in this column!	MATERIALS (SURFACES OF THE MENTIONED BED COMPONENTS) Competent user is responsible for check if used cleaning agents and disinfectants are compatible with mentioned materials!
Head board and foot board	Polypropylene (PP)
Head siderails and foot siderails	Polypropylene (PP)
Decors (head board, foot board, head siderails, foot siderails)	Acrylonitrile butadiene styrene (ABS)
Single Collapsible Siderails (3/4 siderails)	Lacquered steel (Fe) + Polyamide (PA)
Mattress support platform covers (Backrest)	Acrylonitrile butadiene styrene (ABS) + Lacquered steel (Fe)
Mattress support platform covers (Thighrest, Calfrest)	Acrylonitrile butadiene styrene (ABS) + Lacquered steel (Fe)
Seat section	Lacquered steel (Fe)
Castors	ZnCr-coated steel (Fe)
Castor control levers	Polyamide (PA)
Frame of the mattress support plat-form	Lacquered steel (Fe)
Undercarriage	Lacquered steel (Fe)
Covers of undercarriage corners	Acrylonitrile butadiene styrene (ABS)
Corner bumpers	Polypropylene (PP)
Tilt lever (Trendelenburg, Antitrende-lenburg)	Polyamide (PA)
Labels	siliconized paper with lamination or with resin
Accessory rail	Lacquered steel (Fe) + Polyethylene (PE)
Control levers	Acrylonitrile butadiene styrene (ABS)

16.1 Safety Instructions for Cleaning and Disinfection of the Bed

Preparation for cleaning:

- ► Drive the bed on a place where the cleaning process will be performed and then brake the bed.
- ► Position backrest and thighrest so the back side of those parts are accessible for cleaning.

Recommendations for cleaning:

- ► Only use detergents designed for cleaning the medical technologies.
- ► Dilute the detergents in accordance with instructions from manufacturer of detergents.
- ► Never use any strong acids or bases. Optimal pH range is 6-8.
- ► Never use abrasive powders, steel wool or other materials and detergents that may damage the surface of the bed.
- ► Never use detergents with solvents that may affect the structure and consistency of the plastic parts (benzene, toluene, acetone etc.).

Cleaning process:

- ► Clean by wiping the bed with damp, well-wrung textile material.
- ► The detergent can be applied by spraying on bed or on the textile material.
- ► Perform cleaning and disinfection of the bed in the appropriate range. The range of cleaning and disinfection should be distinguished according to the degree of contamination of the bed and the cleaning mode (daily, before changing patient or complete).
- ► Let the bed dry completely after cleaning or disinfection process.
- ► After drying the bed place the mattress back on the mattress platform.
- ► After drying the bed check functions of the bed.

16.2 General Instructions for Cleaning and Disinfection

16.2.1 Daily Cleaning

It is recommended to clean all parts of the bed which are often touched by patient or personnel (e.g. siderails, head board and foot board, lifting pole etc.) and all handles, all control elements and accessory rails.

16.2.2 Cleaning before Changing Patients

It is recommended to completely clean and disinfects all parts of the bed which are touched by patient or personnel (see Daily Cleaning), mattress platform and mattress.

16.2.3 Complete Cleaning / Cleaning before First Use

It is recommended to clean the bed completely before the first use and then at least once in 4-8 weeks.

16.2.4 Cleaning of Spilled Fluids

Spilled fluids should be cleaned as soon as possible. Always disconnect the bed from mains before cleaning the spilled fluids. Some fluids used in health care may cause permanent stains.

16.2.5 Damaged Foam Mattress

Mattress should be periodically checked for holes or cracks that may affect the integrity, water resistance or resistance to infections of the cover. Contact the service department of the manufacturer according to scope of damage to cover.

16.3 Choosing of Detergents or Disinfections

CAUTION!
Risk of damaging the bed due to use of incorrect detergent!

► Always consult choosing of the detergent and its dilution with manufacturer of the detergents according to the material table below.

Part of bed – Praktika 2	Daily C&D	Changing patient C&D	Complete C&D
Siderails (stickers)			
■ Split plastic	☑	☑	☑
■ Single collapsible	☑	☑	☑
Mattress platform			
■ Plastic	☑	☑	☑
■ Steel	☑	☑	☑
Handle of positioning lever	☒	☑	☑
Siderails mechanisms	☒	☑	☑
Head Board and Foot Board (stickers)	☒	☑	☑
Corner bumpers	☒	☑	☑
Undercarriage frame	☒	☒	☑
Castors	☒	☒	☑

17 Troubleshooting

Error/Fault	Cause	Solution
Adjusting functions of mattress platform are not working	There is an object under mattress plaftorm.	Remove the object.
	Defective mechanism.	Notify service department.
Back/thighrest cannot be lowered from the highest positiion.	There is an object under the bac-krest or in the lifting mechanism.	Remove the object.
Adjusting siderail is not possible	The siderail lock is dirty	Clean the locking mechanism.
	Defective siderail lock	Notify service department.
Faulty brakes	The brakes are blocked by dirt.	Clean the brake system.
	Defective brake mechanism	Notify service department.
Head/foot boards cannot be inserted	The head/foot board is in the wrong position.	Position head/foot board correctly.
Noisy mechanism of backrest or thighrest positioning	There is dirt in the mechanism.	Notify service department.
It is impossible to set the bed to TR/ATR position	Defective locking mechanism of TR/ATR function	Notify service department.

18 Maintenance

WARNING!
Risk of injury when working on the bed!
► Ensure that the castors are locked prior to installation, putting into service, maintenance and deinstallation.

WARNING!
Risk of injury due to defective bed!
► Have a defective bed repaired immediately.
► If the defect cannot be repaired, do not use the bed.

CAUTION!
Material damage due to incorrect maintenance!
► Ensure that maintenance is performed exclusively by manufacturer´s customer service or by authorised service personnel certified by the manufacturer.
► If the defect cannot be repaired, do not use the bed.

LINET ® recommends attaching the maintenance plaque to the bed.

18.1 Regular maintenance

► Check regularly movable parts for wear.
► Perform regularly visual check of the product (with delivery note if necessary).
► Ask service department of the manufacturer for addition of the original spare parts if some product parts are missing.
► Ask service department of the manufacturer for replacement of any damaged product parts by the original spare parts.
► Check regularly that all accessories are working properly.
► Replace damaged accessories immediately.

18.2 Spare Parts

The serial label is located on the frame of the mattress support platform. The serial label contains information for claims and ordering replacement parts.

Information about spare parts is available from:
■ Manufacturer´s customer service
■ Sales department

18.3 Safety Technical Checks

WARNING!
Risk of injury due to incorrect safety technical checks!
► Ensure that safety technical checks are performed exclusively by manufacturer´s customer service or by authorised service personnel certified by the manufacturer.
► Ensure that the safety technical checks are recorded in the service and maintenance log.

Safety technical check of the medical bed must be performed at least once every 12 months.

The procedure for performing the safety technical check is stipulated in EN 62353:2014.

NOTE On request, the manufacturer will provide service documentation (e.g. circuit diagrams, component part lists, descriptions, calibration instructions etc.) for service personnel for the repair of the equipment designated by the manufacturer as repairable by service personnel.

19 Disposal

19.1 Environment Protection

The company LINET® is aware of the importance of environmental protection for future generations. Within this company the environmental management system is applied in accordance with the internationally agreed standard ISO 14001. The compliance with this standard is annually tested by the external audit executed by an authorised company.

Materials used in this product are not environmentally hazardous. LINET® products meet valid requirements of national and European legislation in the areas of **RoHS** and **REACH**, so they do not contain any prohibited substances in excess quantities.
None of the wooden parts is made of tropical wood (such as mahogany, rosewood, ebony, teak etc.) or made of timber from the Amazon region or from similar rainforests. Product noise (sound pressure level) meets requirements of the regulations for the protection of public health against undesirable effects of noise and vibration in protected interior spaces of buildings (according to standard IEC 60601-2-52). Used packaging materials are in accordance with requirements of the Packaging Act (**Zákon o obalech**).
For disposal of packaging materials after installation of products contact your sales representative or manufacturer´s customer service about the possibility of a free take-back of packaging through an authorized company (more details on **www.linet.cz**).

19.2 Disposal

19.2.1 Within Europe

To dispose of the equipment:

- ► The equipment must not be disposed of as household waste.
- ► Dispose of this equipment at designated collection points or take-back points.

LINET® participates in a collective system with take-back company REMA System (see **www.remasystem.cz/sberna-mista/**).
By bringing electric and electronic equipment to a take-back point, you participate in recycling and you save primary raw material resources while protecting your environment from effects of unprofessional disposal.

19.2.2 Outside Europe

- ► Dispose of the product or its components in accordance with local laws and regulations!
- ► Hire an approved waste disposal company for disposal!

20 Warranty

LINET ® will only be held responsible for the safety and reliability of products that are regularly serviced, maintained and used in accordance with the safety guidelines.

Should a serious defect arise that cannot be repaired during maintenance:

► Do not continue to use the bed.

This product is covered by a 24-month warranty from the date of purchase. The warranty covers all material and manufacturing-related failures and errors. Failures and errors caused by incorrect use and external effects are not covered. Justified complaints will be fixed free of charge during the warranty period. Proof of purchase, with the date of purchase, is required for all warranty service. Our standard terms and conditions apply.

21 Standards and Regulations

Apllied norms are stated on Declaration of Conformity.

The manufacturer adheres to a certified quality management system in compliance with the following standards:

- **ISO 9001**
- **ISO 14001**
- **ISO 13485**
- **MDSAP (Medical Device Single Audit Program)**